StarCharge

EVERSTAR

480kW PV storage & charging integrated equipment

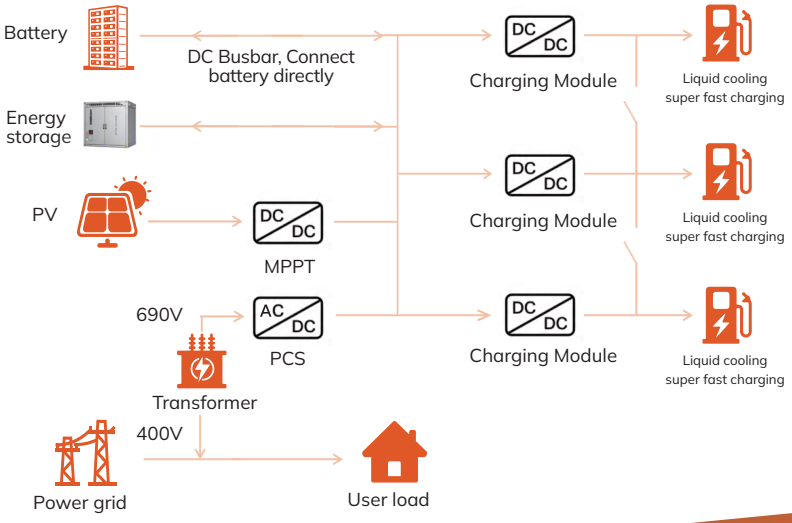



EVERSTAR

PV power generation, energy storage backup, mobile energy storage, intelligent fast charging, green energy saving, s safe and efficient intergrated energy solution.
Suitable for trunk line logistics, port shore power, serving areas, mine lot, remote areas without electricity, carry out green AC off-grid power suply, emergency backup, peak-valley savings and DC fast charging.

Simplified delivery

High integration, floor-mounted, space-saving, reduced construction, accelerated timelines.

Ultimate efficiency

1500Vdc efficient busbar system reduces energy conversicon losses.

Off-grid operation

Off-grid operation with PV & energy storage backup ensures reliable power, applied together with container-basedenergy storage.

Lower costs, higher efficiency

100% PV self-consumption & energy storage peak-valley arbitrage, dynamic capacity expansion, reducing transformer upgrade costs.

Specifications

Battery Specs	
Product Model	GCC-1500V215L418L480H-GB
Cell Type	LFP 314Ah
Pack Configuration	52.25kWh/1P52S
Capacity / Pack Quantity	418kWh/8
Battery Voltage Range	1164.8~1497.66Vdc
C-Rate	≤0.5P
Cycle lifer	8000 cycles (25+2°C,0.5P charge/discharge,70%EOL)
	6000 cycles(25+2°C,0.5P charge/discharge,80%EOL)
PV System	
Input Voltage Range	600~1500Vdc
Output Voltage Range	1000~1500Vdc
MPPT Channels	6 MPPT channels x4
Output Power	320kW
Charging System	
Charging Power	200~480kW
Charging Distribution	Dynamic switiching
Charging Gun Quantity	Liquid Super Fast Charger, 600A × 4 guns
DC Output	Constant Power Output Voltage Range: 500-1500 Vdc;Output Current Range:0-1200A
AC Side Parameters	
Rated Input Power	215~330kW
Rated Input Voltage	200Vac/400Vac/440Vac/480Vac; 3L+N
Off-grid	
Output Power	215kVA
Output Voltage	200Vac/400Vac/440Vac/480Vac; 3L+N
System Parameters	
Connectivity	4G/WIFI/Ethernet
Off-grid Cpacity	Yes
Noise	<75dB
Cooling System	Battery/PCS: Liquid cooling; Charging Modules: Air cooling
IP Class	IP55
Operation Temperature	-25~55°C,derating above 45°C
Relative Humidity	5%-95%; non-condensing
Dimensions (LxBxH)	2198mm×1590mm×2565mm(including lifting lugs)
Weight	5500kg
Corrosion Protection Level	C3(Standard)/C5(Coastal)
Altitude	<2000m